CRYSTALIMAGE Display Technology

RD-128064F

Unmarked tolerance ±0.3

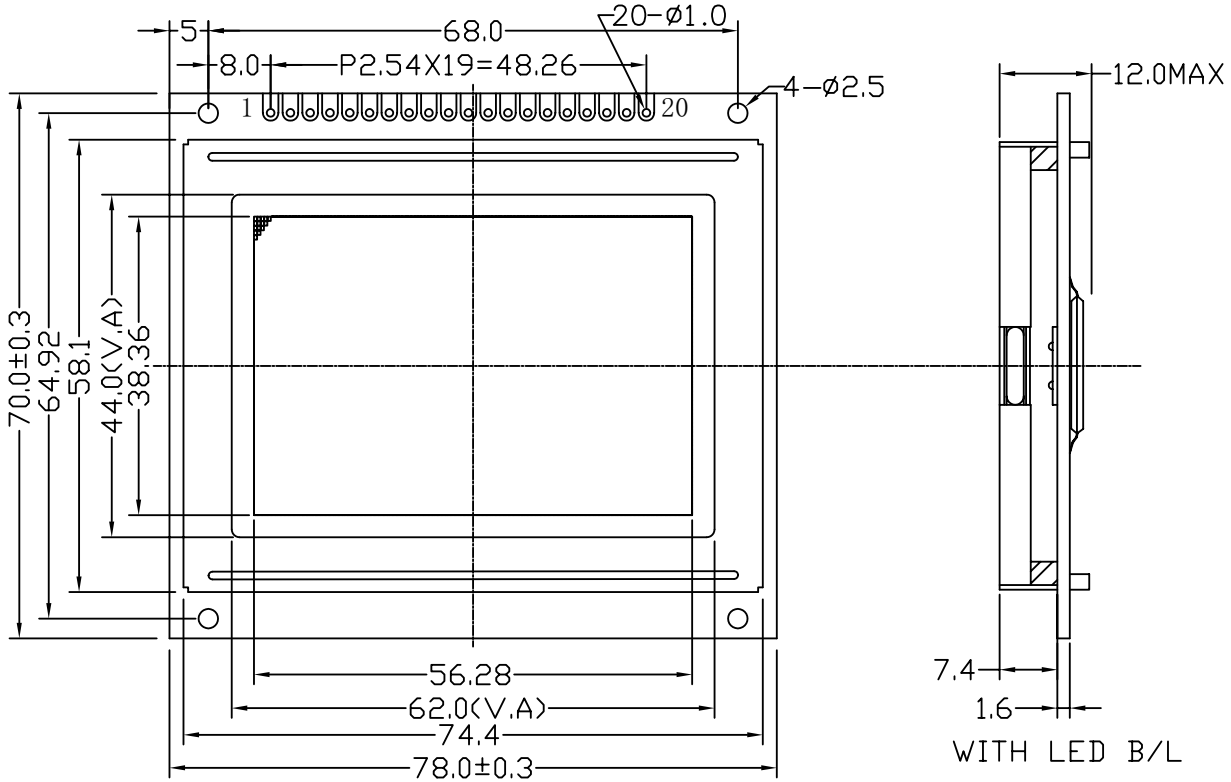

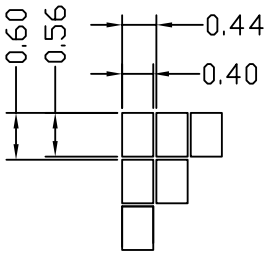

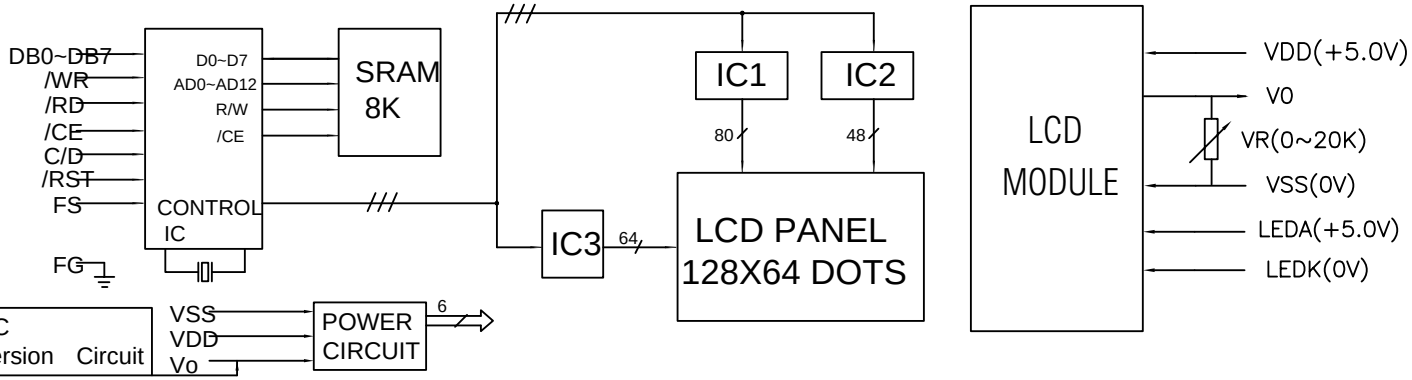

Pin No	Symbol	Pin No	Symbo
1	FG/VEE	11	DB1
2	VSS	12	DB2
3	VDD	13	DB3
4	Vo	14	DB4
5	/WR	15	DB5
6	/RD	16	DB6
7	/CE	17	DB7
8	C/D	18	FS
9	/RST	19	LEDA
10	DB0	20	LEDK