CRYSTALIMAGE Display Technology

RD-128064H

Unmarked tolerance ±0.3

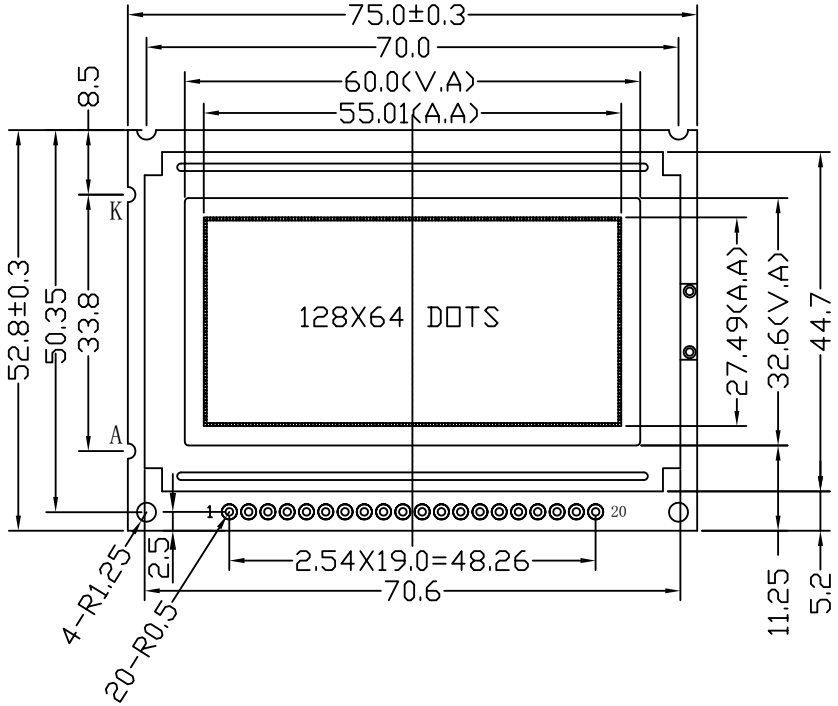

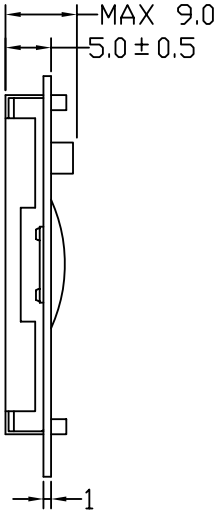

WITH LED B/L

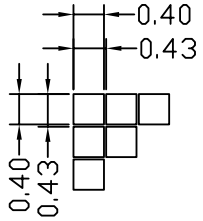

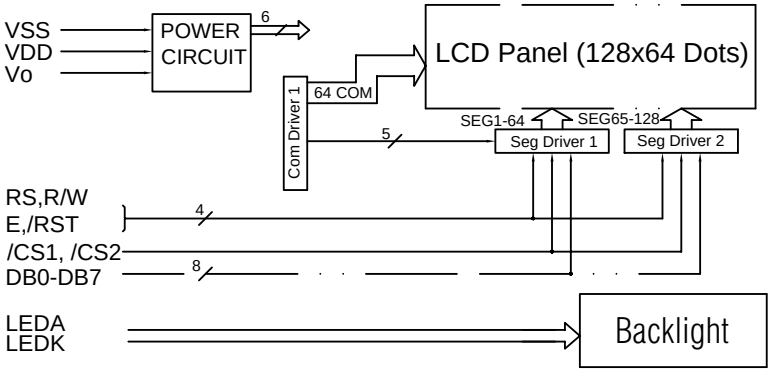

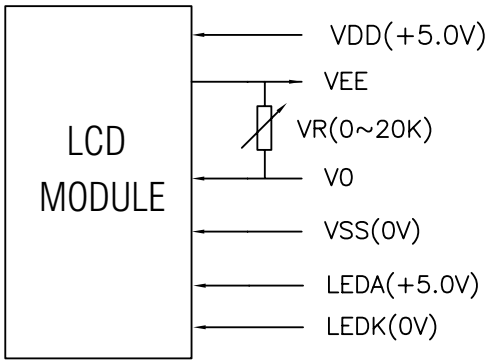

Pin No	Symbol	Pin No	Symbol
1	VSS	11	DB7
2	VDD	12	/CS1
3	Vo	13	/CS2
4	DB0	14	/RST
5	DB1	15	R/W
6	DB2	16	RS
7	DB3	17	E
8	DB4	18	VEE
9	DB5	19	LEDA
10	DB6	20	LEDK